CSEC Mathematics

January 2013 – Paper 2

Solutions

Kerwin Springer

Best Online Lessons in the Caribbean
WhatsApp **+1868-310-1306** for more information

SECTION I

Answer ALL questions in this section.

All working must be clearly shown.

1. (a) Using a calculator or otherwise, calculate the exact value of

$(2.67 \times 4.1) - 1.3^2$ [3]

Using a calculator,

$(2.67 \times 4.1) - 1.3^2$

$= 10.947 - 1.69$

$= 9.257$

(b) Mr. Harry who lives in St. Kitts is planning to travel to Barbados. A travel club offers the rates shown below.

Petty's Travel Club	
Holiday in Barbados	
Return Air Fare	US $356.00
Hotel Accommodation	US $97.00 per night

(i) Calculate the TOTAL cost of airfare and hotel accommodation for 3 nights using the rates offered by Petty's Travel Club. [3]

Kelvin Springer

Return Airfare = \$356 USD

Hotel Accommodation for 3 nights = \$97 USD $\times$ 3

= \$291 USD

Total cost = Return Airfare + Hotel Accommodation for 3 nights

= \$356 + \$291

= \$647 USD

(ii) Another travel club advertises the following package deal.

Angie's Travel Club
Holiday in Barbados
3 Nights Hotel Accommodation plus Return Air Fare
EC \$1610.00

Calculate, in US dollars, the cost of the trip for 3 nights as advertised by Angie's travel club.

US \$1.00 = EC \$2.70 [2]

\$1 US = 2.70 EC

2.70 EC = \$1 US

$$1 \text{ EC} = \frac{1}{2.70} \text{ US}$$

$$1610 \text{ EC} = \left(\frac{1}{2.70} \times 1610\right) \text{US}$$

$$= 596.30 \text{ US}$$

∴ The cost of the trip for 3 nights as advertised by Angie's travel club is 596.30 US.

(iii) State, giving a reason for your answer, which travel club (Petty's or Angie's) has the better offer. [1]

Angie's Travel Club has the better offer because it is cheaper than Petty's Travel Club.

(iv) The EC $1610.00 charged by Angie's Travel Club includes a sales tax of 15%. Calculate the cost of the trip for three nights BEFORE the sales tax was added. [2]

Cost of the trip before the sales tax $= \frac{\$1610}{115} \times \frac{100}{1}$

$= \$1400$

Total: 11 marks

Kerwin Springer

2. (a) Solve for p

$$2(p+5)-7=4p$$ [2]

$$2(p+5)-7=4p$$

$$2p+10-7=4p$$

$$2p+3=4p$$

$$3=4p-2p$$

$$3=2p$$

$$\frac{3}{2}=p$$

$$p=\frac{3}{2}$$

(b) Factorize completely

(i) $25m^2-1$ [2]

$25m^2-1$

$=(5m)^2-(1)^2$ [Difference of two squares]

$=(5m-1)(5m+1)$

Kerwin Springer

(ii) $2n^2 - 3n - 20$ [2]

$2n^2 - 3n - 20$

$= 2n^2 - 8n + 5n - 20$

$= 2n(n - 4) + 5(n - 4)$

$= (2n + 5)(n - 4)$

(c) A candy store packages lollipops and toffees in bags for sale.

x grams

y grams

5 lollipops and 12 toffees have a mass of 61 grams.

10 lollipops and 13 toffees have a mass of 89 grams.

(i) If the mass of one lollipop is x grams and the mass of one toffee is y grams, write two equations in x and y to represent the above information. [2]

$5x + 12y = 61$ ...Equation 1

$10x + 13y = 89$ ...Equation 2

(ii) Calculate the mass of

(a) ONE lollipop

$5x + 12y = 61$ ...Equation 1

$10x + 13y = 89$ ...Equation 2

<u>Rearranging Equation 2 to get Equation 3:</u>

$13y = 89 - 10x$

$y = \frac{89-10x}{13}$ ...Equation 3

<u>Substituting Equation 3 into Equation 1:</u>

$$5x + 12\left(\frac{89 - 10x}{13}\right) = 61$$

$$5x + \left(\frac{1068 - 120x}{13}\right) = 61$$

<u>Multiplying throughout by 13:</u>

$$13(5x) + 13\left(\frac{1068 - 120x}{13}\right) = 13(61)$$

$$65x + (1068 - 120x) = 793$$

$$65x + 1068 - 120x = 793$$

$$1068 - 55x = 793$$

$$-55x = 793 - 1068$$

$$-55x = -275$$

Kerwin Springer

$$x = \frac{-275}{-55}$$

$$x = 5$$

∴ The mass of one lollipop is 5g.

(b) ONE toffee [4]

Substituting $x = 5$ into Equation 1 to find y:

$$5(5) + 12y = 61$$

$$25 + 12y = 61$$

$$12y = 61 - 25$$

$$12y = 36$$

$$y = \frac{36}{12}$$

$$y = 3$$

∴ The mass of one toffee is 3g.

Total: 12 marks

Kerwin Springer

3. (a) There are 50 students in a class. Students in the class were given awards for Mathematics or Science.

36 students received awards in either Mathematics or Science.

6 students received awards in BOTH Mathematics and Science.

$2x$ students received awards for Mathematics only.

x students received awards for Science only.

In the Venn Diagram below:

$U = \{\text{all the students in the class}\}$

$M = \{\text{students who received awards for Mathematics}\}$

$S = \{\text{students who received awards for Science}\}$

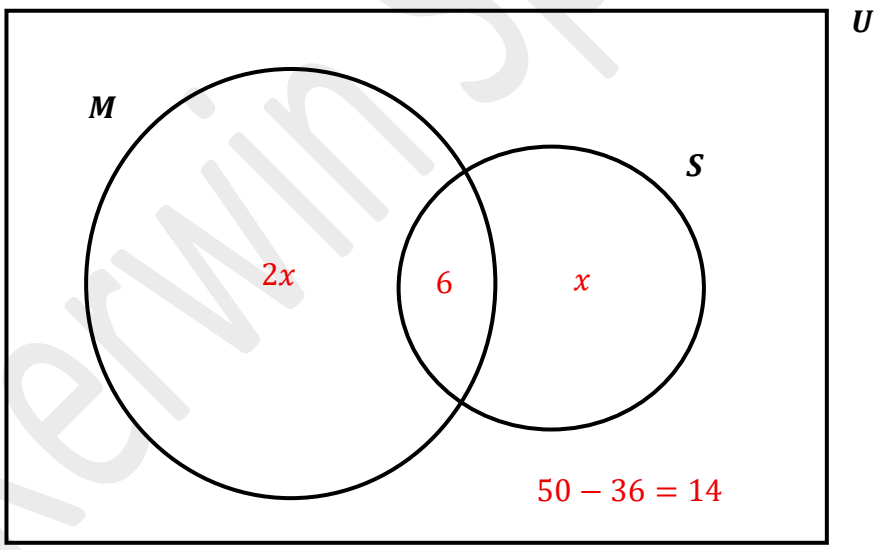

(i) Copy and complete the Venn Diagram to represent the information about the awards given, showing the number of students in EACH subset.

[4]

Kerwin Springer

(ii) Calculate the value of x. [2]

$$2x + 6 + x + 14 = 50$$

$$3x + 20 = 50$$

$$3x = 50 - 20$$

$$3x = 30$$

$$x = \frac{30}{3}$$

$$x = 10$$

(b) In the diagram below, **not drawn to scale**, ABC is an isosceles triangle with $AB = AC$ and angle $ABC = 54°$. DE is parallel to BC.

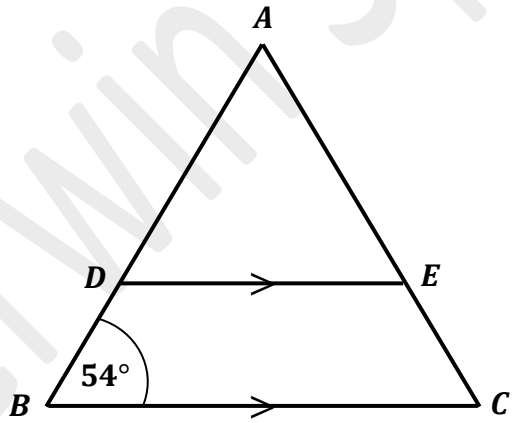

(i) Calculate, **giving a reason for your answer**, the measure of:

(a) $\angle BAC$

Kerwin Springer

Since ABC is an isosceles triangles and $AB = AC$, then

$A\hat{B}C = A\hat{C}B = 54°$.

Since there are 180° in a triangle, then $B\hat{A}C = 180° - (54° + 54°)$

$= 72°$

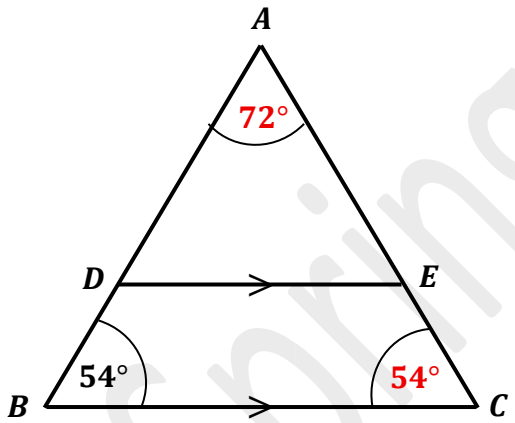

(b) $\angle AED$ [4]

Corresponding angles are equal when parallel lines are cut by a transversal.

$\therefore\ A\hat{C}B = A\hat{E}D = 54°$

Kerwin Springer

(ii) Explain why triangles ABC and ADE are similar but not congruent. [2]

Two triangles are congruent if both their corresponding sides and angles are equal.

Comparing Corresponding Sides of both Triangles:

Length of AB > Length of AD

Length of BC > Length of DE

Length of AC > Length of AE

Comparing Corresponding Angles of both Triangles:

$\angle ABC = \angle ADE$ $\angle ACB = \angle AED$ $\angle BAC = \angle DAE$

Triangle ABC and ADE are similar since:

1. They are both Isosceles
2. Corresponding Angles are Equal

Triangle ABC and ADE are **not** congruent since:

1. Corresponding Sides of both Triangles are not Equal

[By Definition of Congruent Triangle]

Total: 12 marks

Kerwin Springer

4. (a) Make r the subject of EACH of the following formulae:

(i) $r - h = rh$ [2]

$$r - h = rh$$

$$r - rh = h$$

$$r(1 - h) = h$$

$$r = \frac{h}{(1 - h)}$$

$$r = \frac{h}{1 - h}$$

(ii) $V = \pi r^2 h$ [2]

$$V = \pi r^2 h$$

$$\frac{V}{\pi h} = r^2$$

$$\sqrt{\frac{V}{\pi h}} = r$$

$$r = \sqrt{\frac{V}{\pi h}}$$

Kerwin Springer

(b) The functions f and g are defined as follows:

$$f(x) = 2x + 5$$

$$g(x) = \frac{x-3}{2}$$

Evaluate:

(i) $f^{-1}(19)$ [2]

$$f(x) = 2x + 5$$

Ley $y = f(x)$

$$y = 2x + 5$$

Make x the subject of the formula:

$$y = 2x + 5$$

$$y - 5 = 2x$$

$$\frac{y-5}{2} = x$$

$$x = \frac{y-5}{2}$$

Interchange x and y:

$$y = \frac{x-5}{2}$$

Kerwin Springer

$$\therefore f^{-1}(x) = \frac{x-5}{2}$$

$$f^{-1}(19) = \frac{19-5}{2}$$

$$= \frac{14}{2}$$

$$= 7$$

(ii) $gf(3)$ [2]

$f(x) = 2x + 5$ $g(x) = \frac{x-3}{2}$

$$gf(x) = g[f(x)]$$

$$= g[2x+5]$$

$$= \frac{[2x+5]-3}{2}$$

$$= \frac{2x+5-3}{2}$$

$$= \frac{2x+2}{2}$$

$$= \frac{2(x+1)}{2}$$

$$= x + 1$$

Kerwin Springer

$$gf(3) = 3 + 1$$

$$= 4$$

(c) A line segment GH has equation $3x + 2y = 15$.

(i) Determine the gradient of GH. [1]

$$3x + 2y = 15$$

$$2y = 15 - 3x$$

$$y = \frac{15 - 3x}{2}$$

$$y = \frac{15}{2} - \frac{3x}{2}$$

$$y = -\frac{3}{2}x + \frac{15}{2}$$

Which is of the form

$$y = mx + c$$

Where

$$gradient, m = -\frac{3}{2}$$

Kerwin Springer

(ii) Another line segment, JK, is perpendicular to GH and passes through the point $(4, 1)$. Determine the equation of the line JK. [3]

Since JK is perpendicular to GH, then the gradient for $JK = \frac{2}{3}$.

Substituting $gradient, m = \frac{2}{3}$ and the point $(4, 1)$ into:

$$y - y_1 = m(x - x_1)$$

$$y - 1 = \frac{2}{3}(x - 4)$$

$$y - 1 = \frac{2}{3}x - \frac{8}{3}$$

$$y = \frac{2}{3}x - \frac{8}{3} + 1$$

$$y = \frac{2}{3}x - \frac{5}{3}$$

$\therefore$ The equation of the line JK is $y = \frac{2}{3}x - \frac{5}{3}$.

Total: 12 marks

Kerwin Springer

5. An answer sheet is provided for this question.

(a) The diagram below is a scale drawing showing the line RT and the north direction on a playground.

It is drawn to a scale of 1 centimetre : 30 metres.

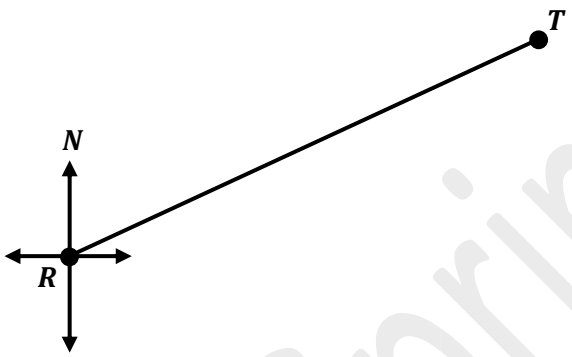

Using the answer sheet provided,

(i) measure and state, in centimetres, the length of RT as drawn on the diagram. [1]

Using a ruler, the length of RT is 5.8 cm.

(ii) measure and state, in degrees, the size of the angle that shows the bearing of T from R. [2]

Using a protractor, $N\hat{R}T = 65°$.

$\therefore$ The bearing of T from R is 065°.

Kerwin Springer

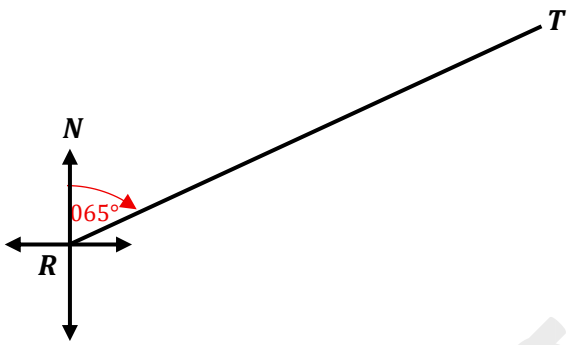

(iii) calculate the actual distance, in metres, on the playground that RT represents. [2]

Using a ruler, the length of RT is 5.8 cm.

The scale given is 1 centimetre : 30 metres

$1\ cm = 30\ m$

$5.8cm = 30m \times 5.8$

$= 174\ m$

∴ The actual distance that RT represents is 174m.

Kerwin Springer

(b) A point M on the playground is located 300 metres from R on a bearing of 120°.

On the same answer sheet,

(i) calculate, in centimetres, the length of RM that should be used on the scale drawing. [2]

The scale given is 1 centimetre : 30 metres

$$1\ cm = 30\ m$$

$$30\ m = 1\ cm$$

$$1\ m = \frac{1}{30}\ cm$$

$$300\ m = \frac{1}{30} \times 300$$

$$= 10\ cm$$

∴The length of RM should be 10 cm on the drawing.

Kerwin Springer

(ii) using a ruler and a pair of compasses, draw the line RM on the scale drawing. [4]

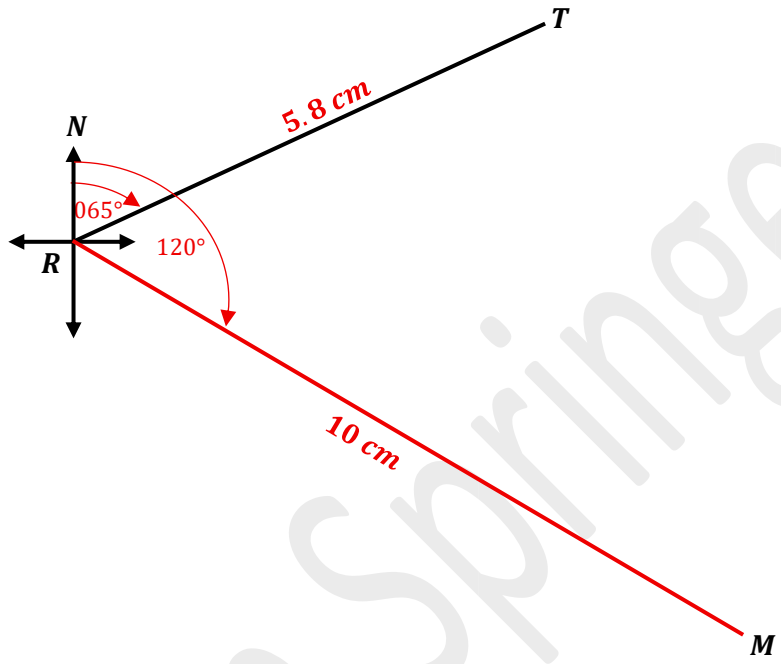

(iii) mark and name the angle in the scale drawing that measures 120°. [1]

Shown in the diagram above.

Total: 12 marks

Kerwin Springer

6. The diagram below, **not drawn to scale**, shows a hollow cylinder with height 8 cm and diameter 12 cm.

Use $\pi = 3.14$

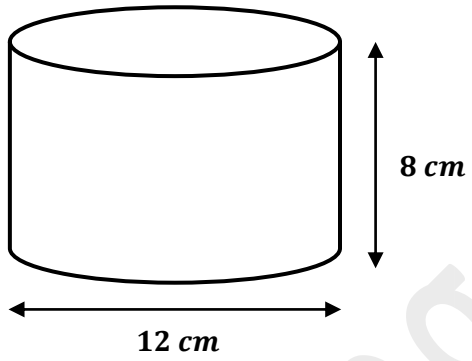

(a) Calculate for the cylinder:

(i) the radius [1]

$$Radius = \frac{diameter}{2}$$

$$= \frac{12\ cm}{2}$$

$$= 6\ cm$$

(ii) the circumference of the cross section [2]

$$\text{Circumference} = 2\pi r$$

$$= 2(3.14)(6)$$

$$= 37.68\ cm$$

Kerwin Springer

(b) The rectangle shown below, **not drawn to scale**, represents the net of the curved surface of the cylinder shown above.

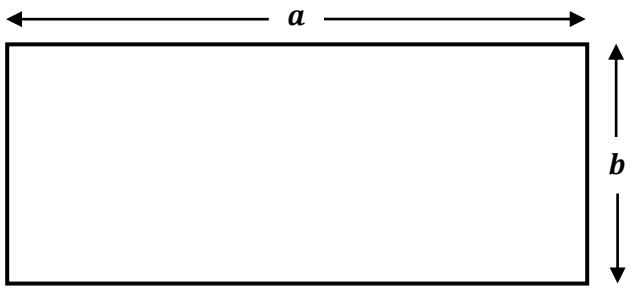

(i) State the values of a and b. [2]

$a = 37.68\ cm$

$b = 8\ cm$

(ii) Hence, calculate the area of the curved surface of the cylinder. [2]

The area of the curved surface can be found by finding the area of the rectangle shown above.

Area of the curved surface $= a \times b$

$= 37.68 \times 8$

$= 301.44\ cm^2$

Kerwin Springer

(c) If 0.5 litres of water is poured into the cylinder, calculate, correct to one decimal place, the height of water in the cylinder. [4]

1 litre $= 1000\ cm^3$

0.5 litres $= 1000 \times 0.5\ cm^3$

$= 500\ cm^3$

Volume of a cylinder $= \pi r^2 h$

$500 = (3.14)(6)^2 h$

$500 = 113.04h$

$\frac{500}{113.04} = h$

$4.42 = h$

$h = 4.42$

$h = 4.4$ [correct to 1 decimal place]

Total: 12 marks

Kerwin Springer

7. The scores obtained by 100 children in a competition are summarized in the table below.

Score	Class mid-point (x)	Frequency (f)	$f \times x$
$0 - 9$	4.5	8	36
$10 - 19$	14.5	13	188.5
$20 - 29$		25	
$30 - 39$		22	
$40 - 49$		20	
$50 - 59$		12	
Total		**100**	

(a) (i) State the modal class interval. [1]

The modal class interval is $20 - 29$ points since it has the highest frequency.

(ii) State the class interval in which a score of 19.4 would lie. [1]

The score 19.4 would lie in the class interval $10 - 19$.

Kerwin Springer

(b) (i) Copy and complete the table to show

(a) the class mid-points

(b) the values of "$f \times x$". [2]

Score	Class mid-point (x)	Frequency (f)	$f \times x$
$0 - 9$	4.5	8	36
$10 - 19$	14.5	13	188.5
$20 - 29$	24.5	25	612.50
$30 - 39$	34.5	22	759
$40 - 49$	44.5	20	890
$50 - 59$	54.5	12	654
Total		$\sum f = 100$	$\sum fx = 3140$

Working:

For the class interval $20 - 29$,

Lower Class Boundary (LCB) $= 19.5$

Upper Class Boundary (UCB) $= 29.5$

$$Class\ midpoint = \frac{LCB + UCB}{2}$$

$$= \frac{19.5 + 29.5}{2}$$

$$= 24.5$$

Kerwin Springer

$f \times x \quad = 24.5 \times 25$

$= 612.50$

<u>For the class interval $30 - 39$,</u>

Lower Class Boundary (LCB) = 29.5

Upper Class Boundary (UCB) = 39.5

$$Class\ midpoint = \frac{LCB + UCB}{2}$$

$$= \frac{29.5 + 39.5}{2}$$

$$= 34.5$$

$f \times x \quad = 34.5 \times 22$

$= 759$

<u>For the class interval $40 - 49$,</u>

Lower Class Boundary (LCB) = 39.5

Upper Class Boundary (UCB) = 49.5

$$Class\ midpoint = \frac{LCB + UCB}{2}$$

$$= \frac{39.5 + 49.5}{2}$$

$$= 44.5$$

Kerwin Springer

$f \times x \quad = 44.5 \times 20$

$= 890$

<u>For the class interval 50 – 59,</u>

Lower Class Boundary (LCB) = 49.5

Upper Class Boundary (UCB) = 59.5

$$Class\ midpoint = \frac{LCB + UCB}{2}$$

$$= \frac{49.5 + 59.5}{2}$$

$$= 54.5$$

$f \times x \quad = 54.5 \times 12$

$= 654$

(ii) Calculate the mean score for the sample. [3]

$$Mean, \bar{x} = \frac{\sum fx}{\sum f}$$

$$= \frac{3140}{100}$$

$$= 31.40$$

Kerwin Springer

(c) Explain why the value of the mean obtained in (b)(ii) is only an estimate of the true value. [1]

The mean is obtained using the mid-class interval rather than the actual scores. Since the mean is being calculated using an interval, and the score can be found anywhere in between the range of values for the interval, then the exact value will not be found, but rather, only an estimation of the value.

(d) In order to qualify for the next round of the competition a student must score AT LEAST 40 points.

What is the probability that a student selected at random qualifies for the next round? [2]

$$Probability(Score \geq 40) = \frac{Number\ of\ desired\ outcomes}{Total\ number\ of\ outcomes}$$

$$= \frac{20 + 12}{100}$$

$$= \frac{32}{100}$$

$$= \frac{8}{25}$$

Total: 10 marks

Kerwin Springer

8. The first three diagrams in the sequence are shown below.

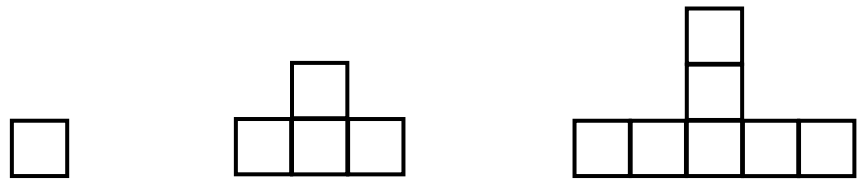

$n = 1$ $n = 2$ $n = 3$

(a) In your answer booklet, draw the FOURTH diagram in the sequence. [2]

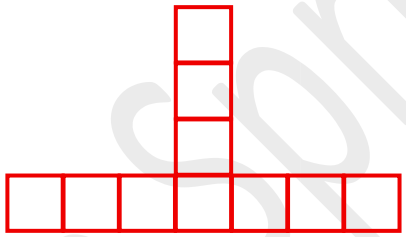

$n = 4$

(b) The table below shows the number of squares in EACH diagram.

Diagram (n)	Number of Squares
1	1
2	4
3	7
4	a

(i)

Kerwin Springer

(ii)	10	b
(iii)	c	40

Determine the values of [5]

(i) a

(ii) b

(iii) c

Looking at Diagrams 1, 2 and 3, we can deduce that

Number of Squares $= 3n - 2$

<u>Finding the value for a:</u>

When $n = 4$,

Number of Squares $= 3(4) - 2$

$= 12 - 2$

$= 10$

Kerwin Springer

Finding the value for b:

When $n = 10$,

$$\text{Number of Squares} = 3(10) - 2$$

$$= 30 - 2$$

$$= 28$$

Finding the value for c:

Substituting Number of Squares $= 40$ and $n = c$ into

$$\text{Number of Squares} = 3n - 2$$

$$40 = 3(c) - 2$$

$$40 = 3c - 2$$

$$40 + 2 = 3c$$

$$42 = 3c$$

$$\frac{42}{3} = c$$

$$14 = c$$

$$c = 14$$

Kerwin Springer

(c) Write down, in terms of n, the number of squares in the nth diagram of the sequence. [3]

Number of Squares $= 3n - 2$

Explanation:

Diagram (n)	Number of Squares
1	1
2	4
3	7

The number of squares increase by 3.

$\therefore$ In terms of n, we can deduce that $Number\ of\ Squares = 3n + k$

[where k is a constant]

Substituting $n = 1$ and $Number\ of\ Squares = 1$ into:

$Number\ of\ Squares = 3n + k$

$1 = 3(1) + k$

$1 = 3 + k$

$1 - 3 = k$

$-2 = k$

$k = -2$

Kerwin Springer

We can also substitute $n = 2$ and Number of Squares $= 4$ OR $n = 3$ and Number of Squares $= 7$ to confirm the value of k.

$\therefore$ Number of Squares $= 3n - 2$

Total: 10 marks

Kerwin Springer

SECTION II

Answer TWO questions in this section.

ALGEBRA AND RELATIONS, FUNCTIONS AND GRAPHS

9. (a) The table below shows corresponding values of x and y for the function

$$y = \frac{3}{x}, \qquad x \neq 0$$

where y represents the velocity of a particle after x seconds.

$x\ (sec)$	0.25	0.5	1	2	3	4	5	6
$y\ (m/s)$	12		3	1.5		0.75		0.5

(i) Copy and complete the table for the function. [2]

$x\ (sec)$	0.25	0.5	1	2	3	4	5	6
$y\ (m/s)$	12	6	3	1.5	1	0.75	0.6	0.5

When $x = 0.5$,

$$y = \frac{3}{0.5}$$

$$= 6$$

When $x = 3$,

$$y = \frac{3}{3}$$

$$= 1$$

When $x = 5$,

$$y = \frac{3}{5}$$

$$= 0.6$$

Kerwin Springer

(ii) Using a scale of **2 cm to represent 1 unit on the x-axis and 1 cm to represent 1 unit on the y-axis**, plot the points from your table, drawing a smooth curve through all points. [5]

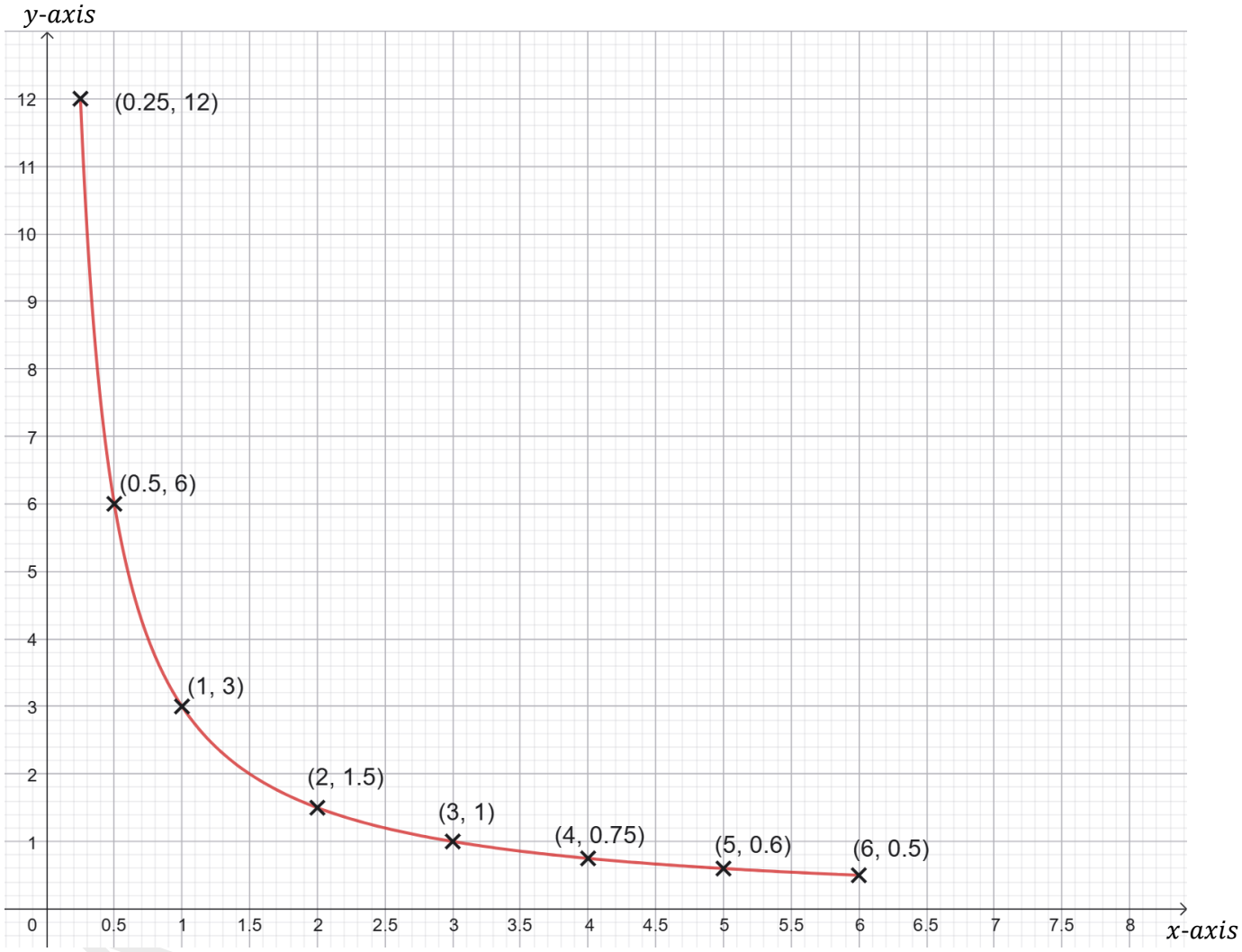

(b)(i) Write $f(x) = 3x^2 - 5x + 1$ in the form $a(x-h)^2 + k$ where a, h and k are constants to be determined. [2]

$f(x) = 3x^2 - 5x + 1$

Which is of the form $ax^2 + bx + c$ where $a = 3, b = -5$ and $c = 1$.

$$h = \frac{b}{2a}$$

$$= \frac{-5}{2(3)}$$

$$= \frac{-5}{6}$$

$$k = \frac{4ac - b^2}{4a}$$

$$= \frac{4(3)(1) - (-5)^2}{4(3)}$$

$$= \frac{12 - 25}{12}$$

$$= \frac{-13}{12}$$

$$\therefore\ f(x) = 3x^2 - 5x + 1$$

$$= 3\left(x - \left(-\frac{5}{6}\right)\right)^2 + \left(-\frac{13}{12}\right)$$

Kerwin Springer

$$= 3\left(x + \frac{5}{6}\right)^2 - \frac{13}{12}$$

Where $a = 3$, $h = -\frac{5}{6}$ and $k = -\frac{13}{12}$.

(ii) Hence, or otherwise, determine the minimum value of $f(x)$ and the value of x for which $f(x)$ is a minimum. [2]

The minimum value of $f(x) = k$

$$= -\frac{13}{12}$$

The value of x for which $f(x)$ is a minimum $= -h$

$$= -\left(-\frac{5}{6}\right)$$

$$= \frac{5}{6}$$

Kerwin Springer

(iii) Solve the equation

$3x^2 - 5x + 1 = 0$, expressing your answer correct to two decimal places. [4]

$3x^2 - 5x + 1 = 0$ is of the form

$ax^2 + bx + c = 0$, where $a = 3, b = -5$ and $c = 1$.

Using the Quadratic Formula:

$$x = \frac{-b \pm \sqrt{b^2 - 4ac}}{2a}$$

$$x = \frac{-(-5) \pm \sqrt{(-5)^2 - 4(3)(1)}}{2(3)}$$

$$x = \frac{5 \pm \sqrt{25 - 12}}{6}$$

$$x = \frac{5 \pm \sqrt{13}}{6}$$

$x = \frac{5+\sqrt{13}}{6}$ or $x = \frac{5-\sqrt{13}}{6}$

$x = 1.43$ or $x = 0.23$ [correct to 2 decimal places]

Total: 15 marks

Kerwin Springer

10. (a) The diagram below, **not drawn to scale**, shows a circle, centre O. RQ is a diameter and PM and PN are tangents to the circle. Angle $MPN = 54°$ and angle $RQM = 20°$.

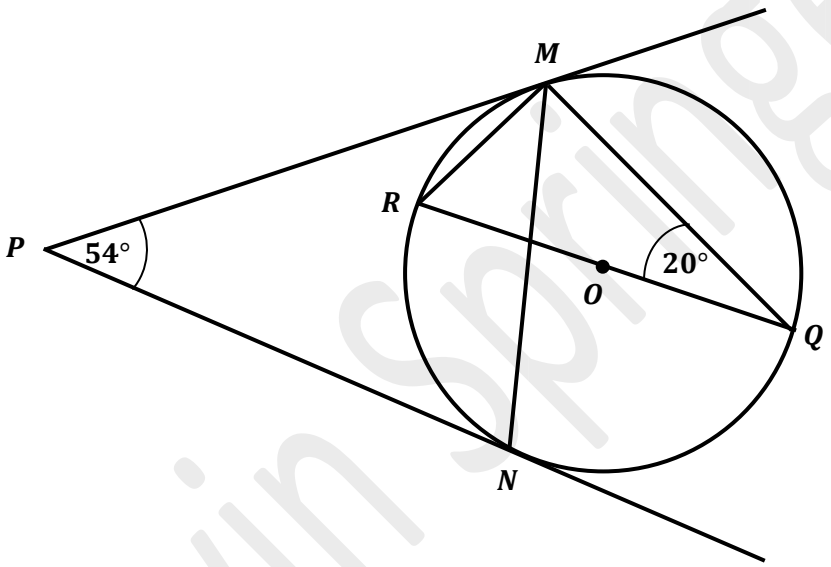

Calculate, giving reasons for your answer, the measure of:

(i) $\angle MRQ$ [2]

$R\hat{M}Q = 90°$ [Since the angle in a semi-circle is a right angle]

Since the angles in a triangle add up to 180°,

$M\hat{R}Q = 180° - (90° + 20°)$

Kerwin Springer

$M\hat{R}Q = 180° - (110°)$

$M\hat{R}Q = 70°$

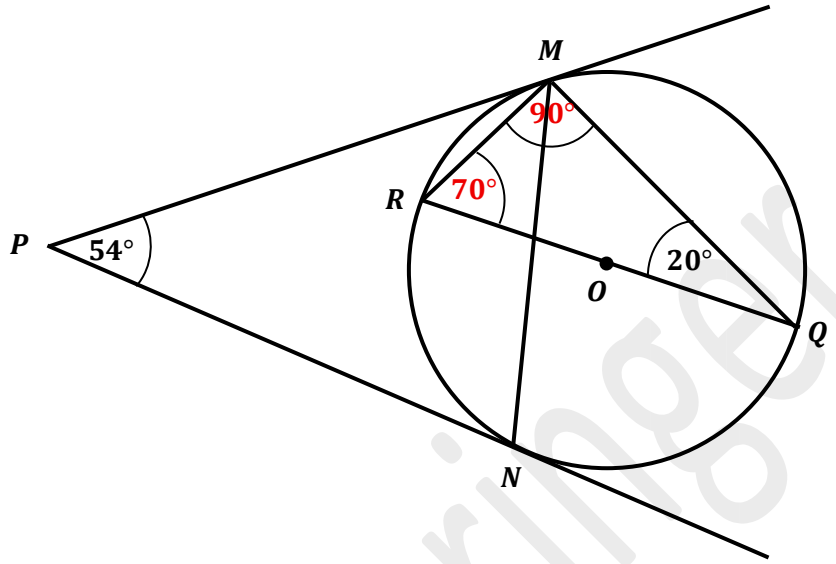

(ii) $\angle PMR$ [2]

$P\hat{M}R = 20°$

Since the angle between a tangent and chord is equal to the angle subtended by the same chord in the alternate segment.

(iii) $\angle PMN$ [3]

Since they are both tangents to the circle, with the same starting point,

$P\hat{M}N = P\hat{N}M$

$= \dfrac{180° - 54°}{2}$

Kerwin Springer

$$= \frac{126°}{2}$$

$$= 63°$$

(b)(i) The diagram below, **not drawn to scale**, shows the position of three points A, B and C on a horizontal plane.

$AB = 174$ metres, $BC = 65$ metres and $AC = 226$ metres

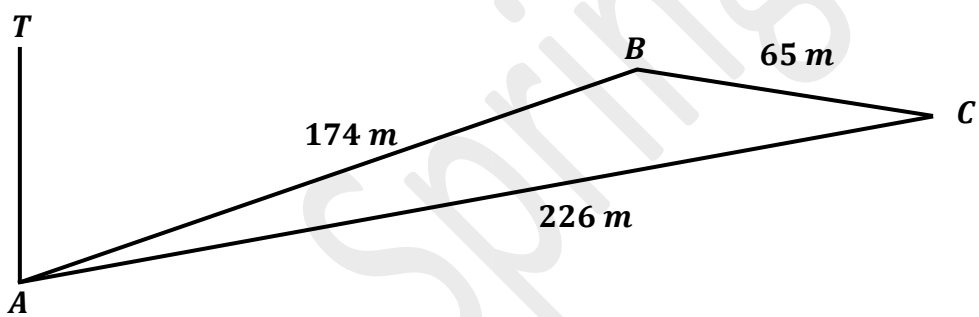

Calculate

(a) the measure of angle ABC [2]

Using the cosine rule,

$$b^2 = a^2 + c^2 - 2ac\cos B$$

$$(226)^2 = (65)^2 + (174)^2 - 2(65)(174)\cos B$$

$$51076 = 4225 + 30276 - 22620\cos B$$

$$51076 = 34501 - 22620\cos B$$

$$22620\cos B = 34501 - 51076$$

Kerwin Springer

$$22620 \cos B = -16575$$

$$\cos B = -\frac{16575}{22620}$$

$$B = \cos^{-1}\left(-\frac{16575}{22620}\right)$$

$$B = \cos^{-1}\left(\frac{77127}{22620}\right)$$

$$B = 137.12° \quad \text{[correct to 2 decimal places]}$$

(b) the area of triangle ABC [2]

$$\text{Area of triangle} = \frac{1}{2}\, ac \sin B$$

$$= \frac{1}{2}\,(65)(174)\sin(137.12°)$$

$$= 5655 \sin(137.12°)$$

$$= 3848.03\ m^2 \quad \text{[correct to 2 decimal places]}$$

Kerwin Springer

(ii) The line TA represents a vertical lighthouse. The angle of elevation of T from B is 23°.

(a) In your answer booklet, draw the triangle TAB showing the angle of elevation. [2]

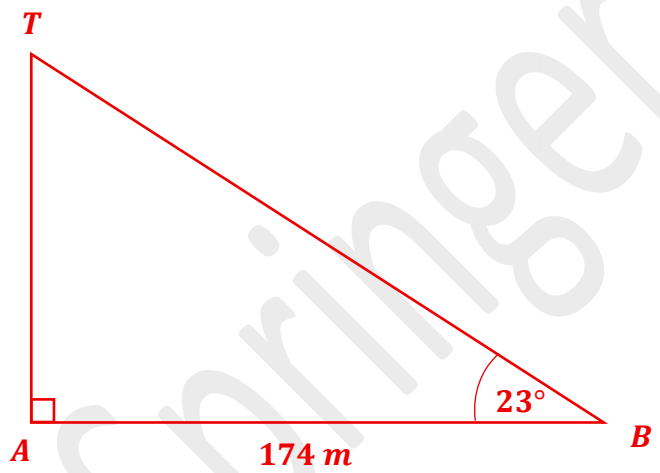

(b) Calculate the height, TA, of the lighthouse. [2]

$$\tan\theta = \frac{opp}{adj}$$

$$\tan 23 = \frac{TA}{174}$$

$$\tan 23 \times 174 = TA$$

$$TA = \tan 23 \times 174$$

$$TA = 73.86\ m \text{ [correct to 2 decimal places]}$$

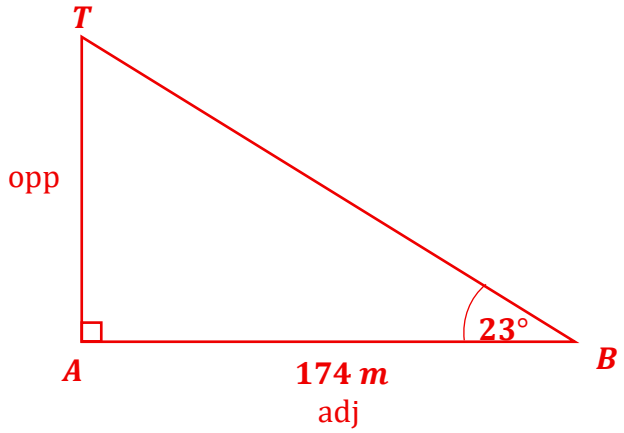

Total: 15 marks

Kerwin Springer

11. (a) The diagram below, **not drawn to scale**, shows a parallelogram $OKLM$ where O is the origin. The point S is on KM such that $MS = 2\,SK$.

$\overrightarrow{OK} = \boldsymbol{v}$ and $\overrightarrow{OM} = \boldsymbol{u}$.

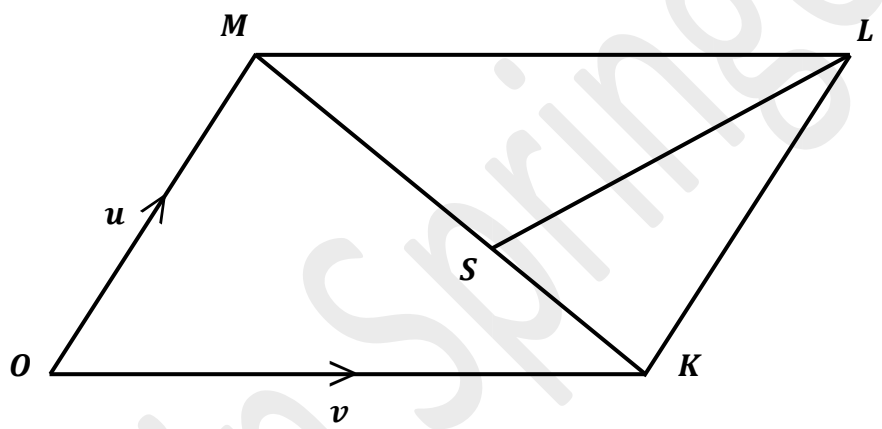

Express EACH of the following in terms of $\boldsymbol{u}$ and $\boldsymbol{v}$:

(i) $\overrightarrow{MK}$ [1]

$\overrightarrow{MK} = \overrightarrow{MO} + \overrightarrow{OK}$

$= -u + v$

Kerwin Springer

(ii) $\overrightarrow{SL}$ [2]

Since $MS = 2\,SK$,

$$\overrightarrow{SK} = \frac{1}{3}\,\overrightarrow{MK}$$

$$= \frac{1}{3}\,(-u + v)$$

Since the opposite sides of parallelogram are parallel and equal,

Then $KL = OM = u$.

Thus, $SL = \overrightarrow{SK} + \overrightarrow{KL}$

$$= \frac{1}{3}(-u + v) + u$$

$$= -\frac{1}{3}u + \frac{1}{3}v + u$$

$$= \frac{2}{3}u + \frac{1}{3}v$$

(iii) $\overrightarrow{OS}$ [2]

$$\overrightarrow{OS} = \overrightarrow{OK} + \overrightarrow{KS}$$

$$= v + -\left[\frac{1}{3}\,(-u + v)\right]$$

Kerwin Springer

$$= v - \left[-\frac{1}{3}u + \frac{1}{3}v\right]$$

$$= v + \frac{1}{3}u - \frac{1}{3}v$$

$$= \frac{1}{3}u + \frac{2}{3}v$$

(b) The matrix $J = \begin{pmatrix} 0 & -1 \\ 1 & 0 \end{pmatrix}$ represents a single transformation.

The image of the point P under transformation J is $(5, 4)$.

Determine the coordinates of P. [3]

$$\begin{pmatrix} 0 & -1 \\ 1 & 0 \end{pmatrix}\begin{pmatrix} x \\ y \end{pmatrix} = \begin{pmatrix} 5 \\ 4 \end{pmatrix}$$

$$\begin{pmatrix} (0 \times x) + (-1 \times y) \\ (1 \times x) + (0 \times y) \end{pmatrix} = \begin{pmatrix} 5 \\ 4 \end{pmatrix}$$

$$\begin{pmatrix} (0) + (-y) \\ (x) + (0) \end{pmatrix} = \begin{pmatrix} 5 \\ 4 \end{pmatrix}$$

$$\begin{pmatrix} -y \\ x \end{pmatrix} = \begin{pmatrix} 5 \\ 4 \end{pmatrix}$$

Equating the Matrices,

$-y = 5$

$y = -5$

Kerwin Springer

$x = 4.$

$\therefore$ The coordinates of P is $(4, -5)$.

(c)(i) Write down a matrix, H, of size 2×2 which represents an enlargement of scale factor 3 about the origin. [1]

The matrix which represents an enlargement with center O and scale factor k is $\begin{pmatrix} k & 0 \\ 0 & k \end{pmatrix}$. Thus, the matrix which represents an enlargement with center O and scale factor 3 is $\begin{pmatrix} 3 & 0 \\ 0 & 3 \end{pmatrix}$.

Therefore, $H = \begin{pmatrix} 3 & 0 \\ 0 & 3 \end{pmatrix}$

Kerwin Springer

(ii) Determine the coordinates of the point $(5, -7)$ under the combined transformation, H followed by J. [2]

The transformation H followed by J is written as JH

Let $A = (5, -7)$

$$H = \begin{pmatrix} 3 & 0 \\ 0 & 3 \end{pmatrix}$$

Step 1: Find the image of A under the transformation H

$$\begin{pmatrix} 3 & 0 \\ 0 & 3 \end{pmatrix}\begin{pmatrix} 5 \\ -7 \end{pmatrix} = \begin{pmatrix} (3 \times 5) + (0 \times -7) \\ (0 \times 5) + (3 \times -7) \end{pmatrix}$$

$$= \begin{pmatrix} 15 \\ -21 \end{pmatrix}$$

Step 2: Using the image of A under the transformation H, we find the image under the transformation J

$$\begin{pmatrix} 0 & -1 \\ 1 & 0 \end{pmatrix}\begin{pmatrix} 15 \\ -21 \end{pmatrix} = \begin{pmatrix} (0 \times 15) + (-1 \times -21) \\ (1 \times 15) + (0 \times -21) \end{pmatrix}$$

$$= \begin{pmatrix} 21 \\ 15 \end{pmatrix}$$

Thus, the coordinates of the image point when the object point $(5, -7)$ undergoes a combined transformation H followed by J is $(21, 15)$

Kerwin Springer

(d) A superstore sells 3 models of cell phones. Model A costs \$40 each, model B costs \$55 each and model C costs \$120 each.

The weekly sales for 2 weeks in June were:

Week 1	**Week 2**
2 model A	no model A
5 model B	6 model B
3 model C	10 model C

(i) Write down a matrix of size 3×2 which represents the sales for the two weeks. [1]

$$\begin{pmatrix} 2 & 0 \\ 5 & 6 \\ 3 & 10 \end{pmatrix}$$

(ii) Write down a matrix of size 1×3 which represents the cost of the different models of cell phones. [1]

$$\begin{pmatrix} 40 & 55 & 120 \end{pmatrix}$$

(iii) Write down the matrix multiplication for the two matrices which represents the superstore's takings from the sale of cell phones for each of the two weeks. [2]

Kerwin Springer

$$\begin{pmatrix} 40 & 55 & 120 \end{pmatrix} \begin{pmatrix} 2 & 0 \\ 5 & 6 \\ 3 & 10 \end{pmatrix}$$

Total: 15 marks

Kerwin Springer

END OF TEST

IF YOU FINISH BEFORE TIME IS CALLED, CHECK YOUR WORK ON THIS TEST.

Best Online Lessons in the Caribbean
WhatsApp **+1868-310-1306** for more information